D–Subminiature (D–Sub) Accessories

WIDE RANGE OF ACCESSORIES FOR SECURE CONNECTION

Amphenol's D–Subminiature (D–Sub) connectors are part of industry standard and are one of the most popular Input/Output interconnects, addressing a wide variety of applications including telecommunications, industrial and medical.

- Prevents accidental mismating
- Hoods available in 9 to 50 positions for different connector pin configurations
- Metal hoods available in straight and angled terminations for EMI/RFI shielding
- Dust caps available in metal and plastic versions
- Locking screws comes with UNC 4–40 and M3 thread options

TARGET MARKETS

FEATURES	BENEFITS
Hoods available in plastic, metalized and metallic form with locking screws	Supports cable connection and prevents risks of pulling up and accidental mismating
Hoods available in 9 to 50 positions	Suitable for different connector pin configurations including high density series
Metal hoods available in straight and angled terminations	Suitable for EMI/RFI shielding
Hoods available with cable clamps and jackscrews	Assures secure connection with required strain relief
Hoods available in different orientations and locking options	Supports various customization need
Range includes different locking devices like screw locks and lever locks	Ensures secure and reliable connection
Screws available in both UNC 4–40 and M3 thread options	Ensures connector intermateability
Metal and plastic dust caps	Safeguards connector from dust and dirt when kept in unmated condition

TECHNICAL INFORMATION

Asymmetric Digital Subscriber Line (ADSL)
Base Station
Switching
Transmission

Set–top Box

Desktop and Laptop
Storage System
Router and Server

Automotive Diagnostics
Control Drives
Energy Meter
Gaming Machine
Test Equipment
Office Automation
POS & Handheld terminal
Power Supplies
Parking Meter
Printer and Copier
Renewable Energy
Robotics
Surveillance Camera
Avionics

Medical Instrument

Military Equipment

Disclaimer
Please note that the above information is subject to change without notice.

PLASTIC HOODS

1 • STRAIGHT EXIT PLASTIC HOOD WITH INTEGRATED LOCKING – ECONOMICAL SERIES

- Material: Self–extinguishing UL 94 HB Thermoplastic
- Color: Grey
- Temperature Range: –55°C +105°C
- Locking Screws: UNC 4–40 thread

STRAIGHT EXIT HOOD–PLASTIC

Description	Part Numbers
Screw Thread UNC 4–40	8630CH09UNCLF
	8630CH15UNCLF
	8630CH25UNCLF
	8630CH37UNCLF
Screw Thread M3	8630CH09M3LF
	8630CH15M3LF
	8630CH25M3LF
	8630CH37M3LF

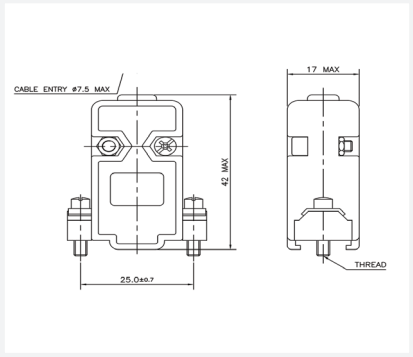

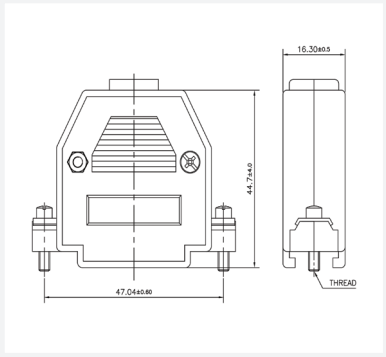

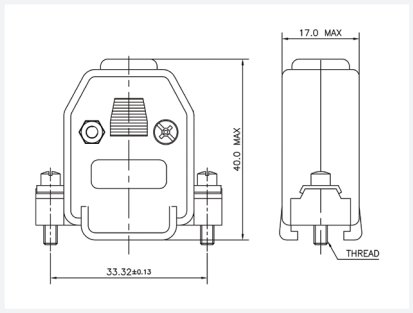

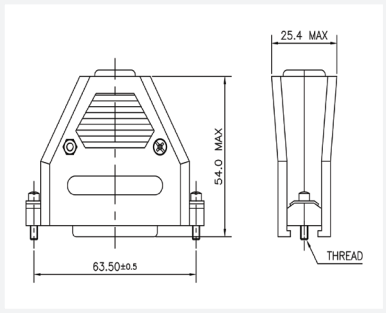

Disclaimer
Please note that the above information is subject to change without notice.

2• UNIVERSAL PLASTIC HOOD WITH METAL CLAMP FOR STRAIN RELIEF – ECONOMICAL SERIES

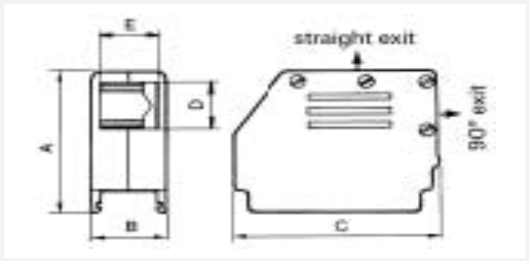

Shell Size	Part Numbers (Black Hood)	Part Numbers (Metalized Hood)	A	B	C	With Clamp			Without Clamp	
						D	E		D	E
							min.	max.		
E	863093C09ALF	863093C09MLF	29.75	15.50	24.25	6	1.90	0.10	8	11.50
A	863093C15ALF	863093C15MLF	29.75	15.50	32.50	6	1.90	0.10	8	11.50
B	863093C25ALF	863093C25MLF	46.50	15.50	46.00	13.50	2.60	0.10	16	11.50
C	863093C37ALF	863093C37MLF	46.50	15.50	60.50	13.50	2.60	0.10	16	11.50
D	863093C50ALF	863093C50MLF	46.50	18.00	56.50	15.50	4.40	12.60	18	14.00

- Material (black hood): Self–extinguishing UL94V–0 thermoplastic
- Material (metalized): Thermoplastic
- Temperature Range: –55°C +125°C
- Packaging: Individual sets

All dimensions in mm.

3• STRAIGHT EXIT "SNAP TOGETHER" PLASTIC HOOD

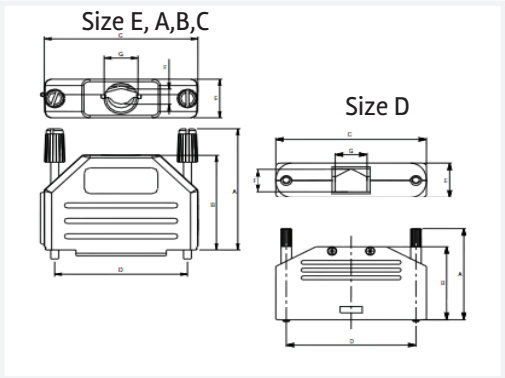

Shell Size	Part Numbers	A	B	C	D	E	With Clamp		Without Clamp		
							F		G	F	G
							min.	max.			
E (9)	86303637BLF	31.0	36.2	32.4	24.99	15	1	5.5	8.5	7	8.5
A (15)	86303638BLF	39.5	40.2	40.7	33.32	15	4	7	12	11	12
B (25)	86303639BLF	53.2	40.2	54.4	47.04	15	4	7	12	11	12
C (37)	86303640BLF	69.7	40.2	70.9	63.5	15	4	7	12	11	12
D (50)	86303641CLF	67.2	43.7	71.2	61.11	15	4	11.5	15.5	14	18

Disclaimer
Please note that the above information is subject to change without notice.

D–Subminiature (D–Sub) Accessories

- Material: Nylon UL 94 V–2
- Material (size D): Thermoplastic (UL94V–2)
- Color: Black
- Temperature Range: –40°C +95°C
- Packaging: Individual sets
- Locking Screws: UNC 4–40 thread

4• ANGLE EXIT PLASTIC HOOD

Size E, A,B,C

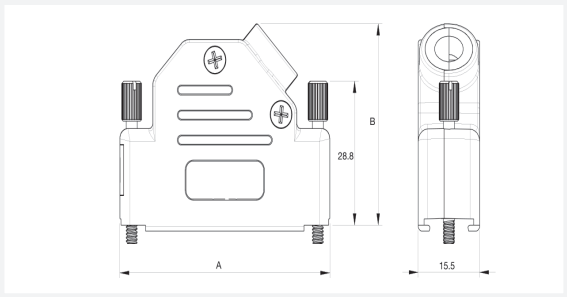

Shell Size	Part Numbers	A	B	Cable Diameter
E (9)	8655PHRA0901LF	31.0	36.2	4 to 13mm
A (15)	8655PHRA1501LF	39.5	40.2	
B (25)	8655PHRA2501LF	53.0	40.2	
C (37)	8655PHRA3701LF	69.5	40.2	

Size E

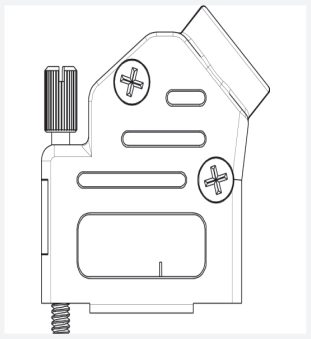

All dimensions in mm.

- Cable Strain Relief: Steel fibre reinforced polycarbonate UL94V–0
- Color: Black
- Temperature Range: –40°C +120°C
- Packaging: Bulk, in box of 100 pieces
- Locking Screws: UNC 4–40 thread

Disclaimer
Please note that the above information is subject to change without notice.

5• STRAIGHT EXIT PLASTIC HOOD WITH LONG JACK SCREW

TECHNICAL INFORMATION

- Material: UL 94 V–0 plastic
- Operating Temperature Range: –55°C to +110°C
- Cable Entry: Top
- Jack Screws: UNC 4–40 (Standard) M2.5 or M3 on request
- Cable O.D: 9–37–way: Up to 11.7mm
- Colour: Black

FEATURES

- Available in sizes 9–15–25–37
- Suitable for any common Sub–D connector
- Strain relief inserts ensure a secure termination
- Re–openable

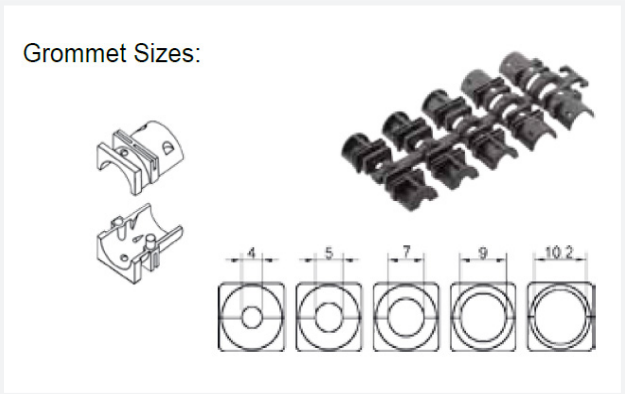

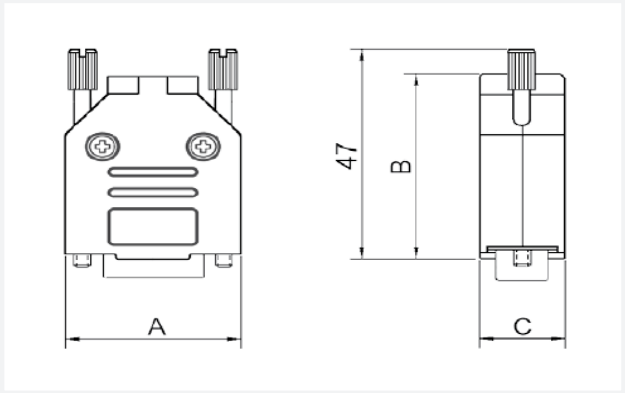

Size	Dim A	Dim B	Dim C
9–way	31.2	39.9	15.0
15–way	39.5	41.5	15.0
25–way	53.4	48.6	15.0
37–way	69.7	53.6	15.0

ORDERING INFORMATION

Description	Size	Part Numbers
PLASTIC HOOD 09	9–way	8655APET1A11KLF
PLASTIC HOOD 15	15–way	8655APAT1A11KLF
PLASTIC HOOD 25	25–way	8655APBT1A11KLF
PLASTIC HOOD 37	37–way	8655APCT1A11KLF

Disclaimer
Please note that the above information is subject to change without notice.

6• STRAIGHT EXIT MONOBLOCK PLASTIC HOOD FOR POTTING

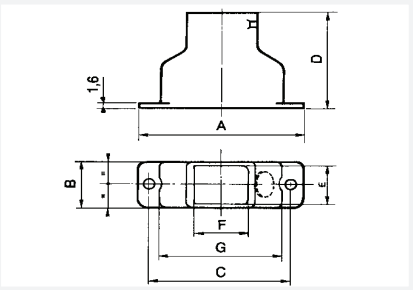

with cable tie

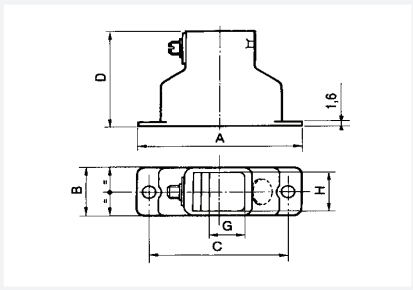

with screw and plate strain relief

Shell Size	Part Numbers		A	B	C	D	E	F	G		H
	Hood with cable tie	Hood with screw and plate							Min.	Max.	
E	863086BLF	86303920ALF	30.60	12.50	25.00	29.00	9.90	9.90	2.70	7.10	10.50
A	863021BLF	86303921ALF	38.90	12.50	33.32	29.00	9.90	11.90	4.50	9.10	10.50
B	863022BLF	86303922ALF	52.80	12.50	47.05	35.00	9.90	16.40	9.20	13.60	10.50
C	863023BLF	86303923ALF	69.10	12.50	63.50	41.00	9.90	23.40	9.20	20.60	10.50
D	863024BLF	86303924ALF	66.70	15.30	61.10	41.00	12.70	23.40	9.20	20.60	13.30

TECHNICAL INFORMATION

- Material: Self–extinguishing
- UL rated 94V–0 thermoplastic
- Operating Temperature Range: –55°C to +110°C
- Colour: Black

7• ANGLE EXIT MONOBLOCK PLASTIC HOOD FOR POTTING

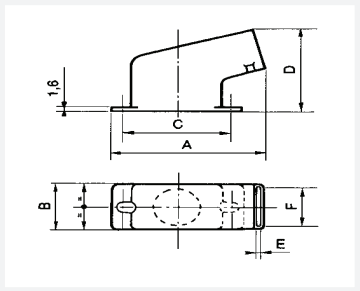

with cable tie

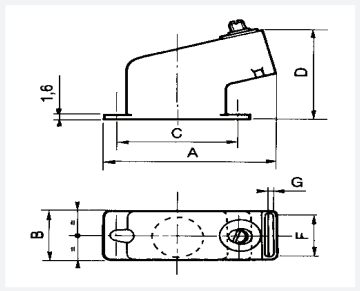

with screw and plate strain relief

Shell Size	Part Numbers		A	B	C	D	E	F	G	
	Hood with cable tie	Hood with screw and plate							Min.	Max.
E	86305002BLF	86303925ALF	30.60	12.50	25.00	26.20	10.50	10.50	2.70	7.10
A	863026BLF	86303926ALF	38.90	12.50	33.32	28.60	12.50	10.50	4.50	9.10
B	863027BLF	86303927ALF	52.80	12.50	47.05	36.40	17.00	10.50	9.20	13.60
C	863028BLF	86303928ALF	69.10	12.50	63.50	42.60	24.00	10.50	9.20	20.60
D	863029BLF	86303929ALF	66.70	15.30	61.10	41.00	24.00	13.30	9.20	20.60

Disclaimer
Please note that the above information is subject to change without notice.

8• STRAIGHT EXIT METAL HOOD WITH PLASTIC SCREW HEAD

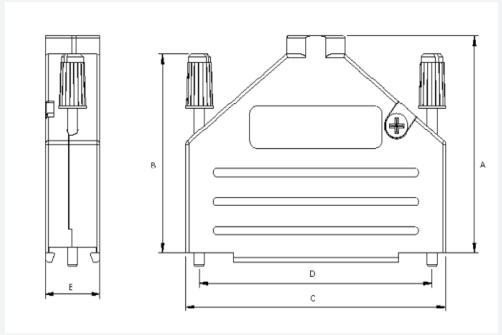

Shell Size	Part Numbers (in bulk)	A	B	C	D	E
E	8655MH0901BLF	38.3	47.3	31	24.99	14.6
A	8655MH1501BLF	40.5	47.3	39.5	33.32	14.6
B	8655MH2501BLF	47.3	47.3	53.2	47.04	14.6
C	8655MH3701BLF	52.2	47.3	70.9	63.5	15

- Material: Zamack, nickel plated
- Cable Strain Relief: Steel fiber reinforced polycarbonate
- UL94V–0 for EMI/RFI screening
- Temperature Range: –40°C +120°C
- Environment: >40dB between 30MHz and 1GHz
- Packaging: Bulk, in box of 100 pieces
- Locking Screws: UNC 4–40 thread

9• ANGLE EXIT METAL HOOD FOR CABLE EMI/RFI

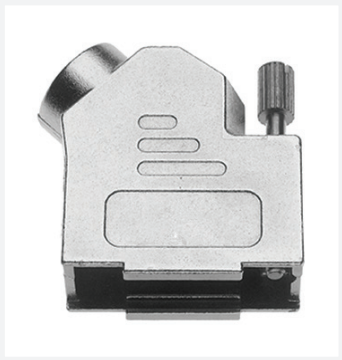

Size A,B,C

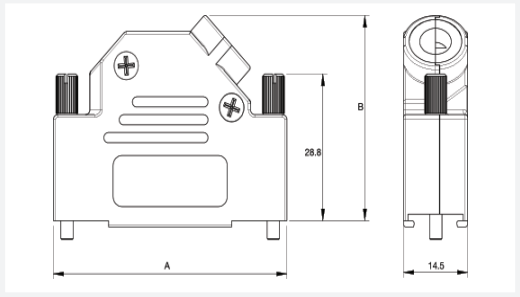

Size E

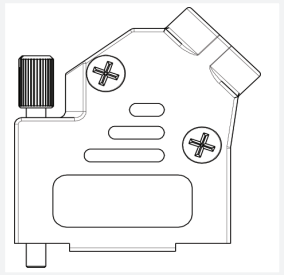

Shell Size	Part Numbers	A	B	Cable Diameter
E (9)	8655MHRA0901LF	31.0	36.2	4 to 13 mm
A (15)	8655MHRA1501LF	39.5	40.2	
B (25)	8655MHRA2501LF	53.2	40.2	
C (37)	8655MHRA3701LF	69.7	40.2	
D (50)	8655MHRA5001LF	67.2	43.7	10 to 16 mm

- Material: Zamack, nickel plated
- Cable Strain Relief: Steel fiber reinforced polycarbonate
- UL94V–0 for EMI/RFI screening
- Temperature Range: –40°C +120°C
- Environment: >40dB between 30MHz and 1GHz
- Packaging: Bulk, in box of 100 pieces
- Locking Screws: UNC 4–40 thread

Disclaimer
Please note that the above information is subject to change without notice.

10• STRAIGHT EXIT FULL METAL HOOD WITH LONG JACK SCREWS

TECHNICAL INFORMATION

- Material: Zinc, Nickel Plated
- Operating Temperature Range: –40°C to +120°C
- Cable Entry: Top Entry
- Jack Screws: UNC 4–40 (Standard) M2.5 or M3 on request
- Cable O.D: Up to 11.5mm (Size 9–37)
  Up to 17mm (Size 50)

FEATURES

- Available in sizes 9–15–25–37–50
- Size 50 equipped with extra cable clamp
- Excellent EMI Shielding
- Re–openable
- Strain relief inserts ensure a secure termination

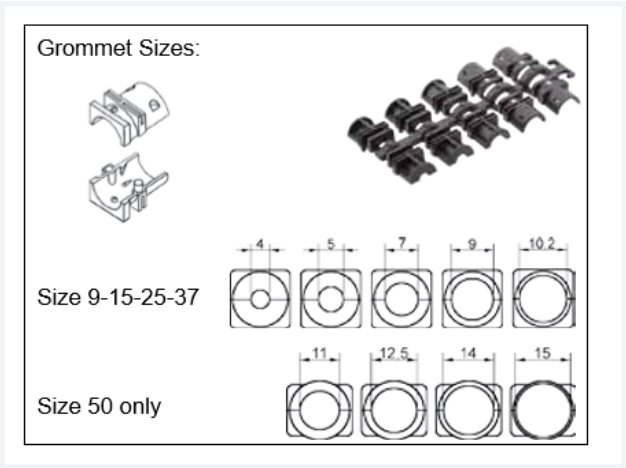

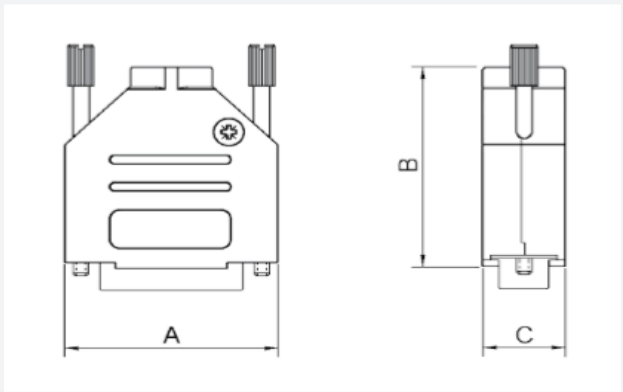

Size	Dim A	Dim B	Dim C
9–way	31.0	39.5	15.0
15–way	39.5	41.5	15.0
25–way	53.5	48.5	15.0
37–way	71.0	53.0	15.0
50–way	67.5	54.0	18.7

ORDERING INFORMATION

Description	Size	Part Numbers
DSUB METAL HOOD 09	9–way	8655AMET1A11KLF
DSUB METAL HOOD 15	15–way	8655AMAT1A11KLF
DSUB METAL HOOD 25	25–way	8655AMBT1A11KLF
DSUB METAL HOOD 37	37–way	8655AMCT1A11KLF
DSUB METAL HOOD 50	50–way	8655AMDT1A11KLF

Disclaimer
Please note that the above information is subject to change without notice.

11• STRAIGHT EXIT FULL METAL HOOD – BLACK COLOUR

TECHNICAL INFORMATION

- Material: Zinc, Black Plated
- Operating Temperature Range: –40°C to +120°C
- Cable Entry: Top Entry
- Jack Screws: UNC 4–40 (Standard) M2.5 or M3 on request
- Cable O.D: Up to 11.5mm

FEATURES

- Available in sizes 9–15–25–37
- Excellent EMI Shielding
- Re–openable
- Strain relief inserts ensure a secure termination

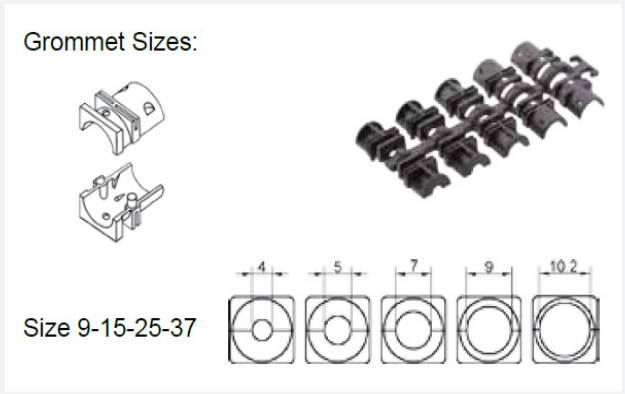

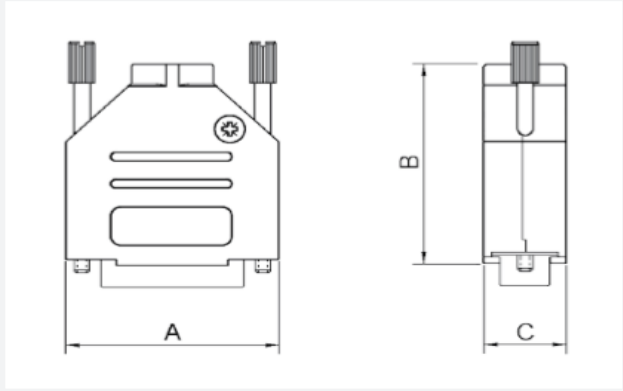

Size	Dim A	Dim B	Dim C
9–way	31.0	39.5	15.0
15–way	39.5	41.5	15.0
25–way	53.5	48.5	15.0
37–way	71.0	53.0	15.0

ORDERING INFORMATION

Description	Size	Part Numbers
DSUB METAL HOOD 09	9–way	8655AMET1A11K001LF
DSUB METAL HOOD 15	15–way	8655AMAT1A11K001LF
DSUB METAL HOOD 25	25–way	8655AMBT1A11K001LF
DSUB METAL HOOD 37	37–way	8655AMCT1A11K001LF

Disclaimer
Please note that the above information is subject to change without notice.

12• STRAIGHT EXIT FULL METAL HOOD WITH DOUBLE CLAMP STRAIN RELIEF

TECHNICAL INFORMATION

- Material: Zinc, Nickel Plated
- Operating Temperature Range: -40°C to +120°C
- Cable Entry: Top entry
- Jack Screws: 55mm, UNC 4-40
  M2.5 or M3 on request
- Cable O.D: 9-way: Up to 8.0mm
  15-way: Up to 11.6mm
  25-way: Up to 11.6mm
  37-way: Up to 11.6mm
  50-way: Up to 14.0mm

FEATURES

- Available in sizes 9-15-25-37-50
- Excellent EMI Shielding
- Re-openable
- Double strain relief for strong and secure cable clamping

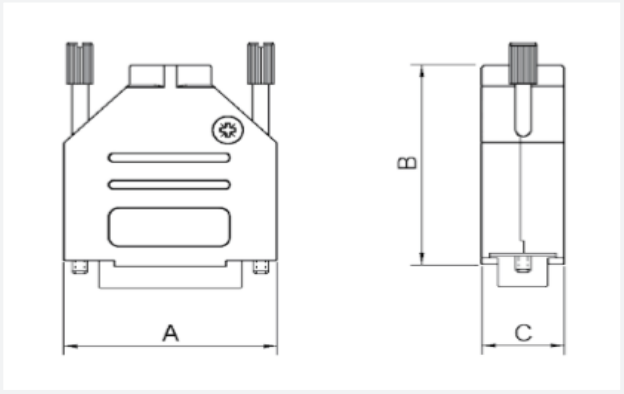

Size	Dim A	Dim B	Dim C
9-way	34.0	45.0	14.6
15-way	43.0	45.0	14.6
25-way	53.5	45.0	14.6
37-way	71.0	45.0	14.6
50-way	71.0	45.0	17.4

ORDERING INFORMATION

Description	Size	Part Numbers
DSUB METAL HOOD 09	9-way	8655BMET1A10KLF
DSUB METAL HOOD 15	15-way	8655BMAT1A10KLF
DSUB METAL HOOD 25	25-way	8655BMBT1A10KLF
DSUB METAL HOOD 37	37-way	8655BMCT1A10KLF
DSUB METAL HOOD 50	50-way	8655BMDT1A10KLF

Disclaimer
Please note that the above information is subject to change without notice.

13• STRAIGHT EXIT FULL METAL HOOD WITH RUBBER GROMMET, SHORT SCREWS

TECHNICAL INFORMATION

- Material: Zinc, Nickel Plated
- Operating Temperature Range: –40°C to +120°C
- Cable Entry: Top Entry
  Rubber Grommet RGS
- Strain relief: Clamp + Insert
- Thumbscrews: UNC 4–40 (Standard)
  M2.5 or M3 on request
- Cable O.D: Up to 11.5mm (Standard)

FEATURES

- 360° EMI Shielding
- Quick assembly
- Pre–mounted locking screws
- Supports all types of cables

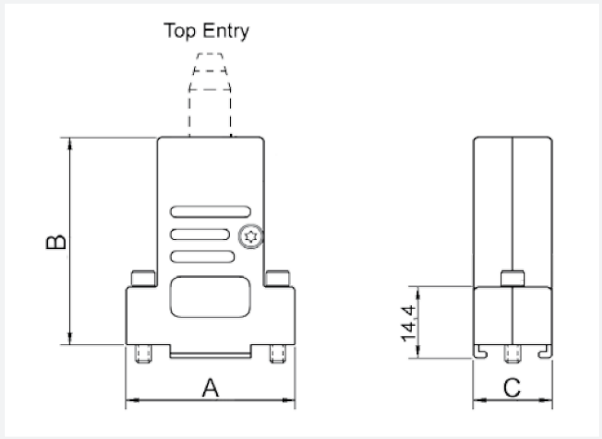

Size	Dim A	Dim B	Dim C
9–way	32.2	42.0	14.5
15–way	40.8	42.3	14.9
25–way	54.0	42.3	14.9
37–way	70.5	48.0	15.1

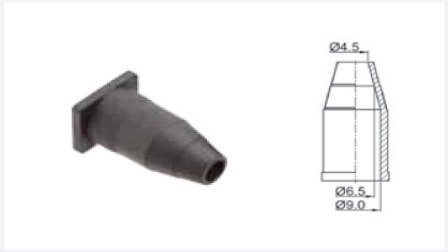

ORDERING INFORMATION

Description	Size	Part Numbers
METAL HOOD 09	9–way	8655DMET1B13KLF
METAL HOOD 15	15–way	8655DMAT1B13KLF
METAL HOOD 25	25–way	8655DMBT1B13KLF
METAL HOOD 37	37–way	8655DMCT1B13KLF

Disclaimer
Please note that the above information is subject to change without notice.

14• ANGLE EXIT FULL METAL HOOD WITH RUBBER GROMMET, SHORT SCREWS

TECHNICAL INFORMATION

- Material: Zinc, Nickel Plated
- Operating Temperature Range: -40°C to +120°C
- Cable Entry: 45° Side Entry
  Rubber Grommet RGS
- Strain relief: Clamp + Insert
- Thumbscrews: UNC 4-40 (Standard)
  M2.5 or M3 on request
- Cable O.D: Up to 11.5mm

FEATURES

- 360° EMI Shielding
- Quick assembly
- Pre-mounted locking screws
- Supports all types of cables

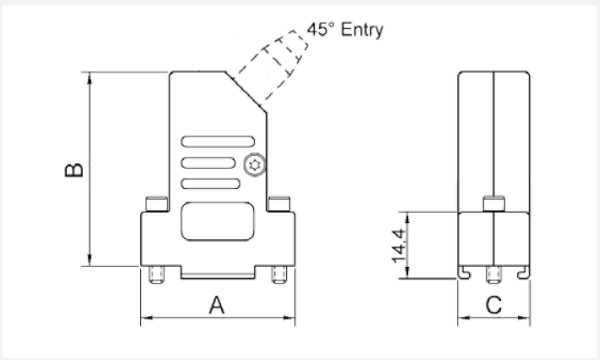

Size	Dim A	Dim B	Dim C
9-way	32.2	42.0	14.5
15-way	40.8	42.3	14.9
25-way	54.0	42.3	14.9
37-way	70.5	48.0	15.1

ORDERING INFORMATION

Description	Size	Part Numbers
METAL HOOD 09	9-way	8655DMES2B13KLF
METAL HOOD 15	15-way	8655DMAS2B13KLF
METAL HOOD 25	25-way	8655DMBS2B13KLF
METAL HOOD 37	37-way	8655DMCS2B13KLF

Disclaimer
Please note that the above information is subject to change without notice.

15• RIGHT ANGLE EXIT FULL METAL HOOD

TECHNICAL INFORMATION

- Material: Zinc, Nickel Plated
- Operating Temperature Range: -40°C to +120°C
- Cable Entry: 90° Side Entry
- Jackscrews: UNC 4-40, M3 on request
- Cable O.D: Up to 11.7mm
- Type of grommets: 2 piece Plastic Ferrule Kit

FEATURES

- Available in sizes 9-15-25-37-way
- Suitable for any common Sub-D connector
- Re-Openable

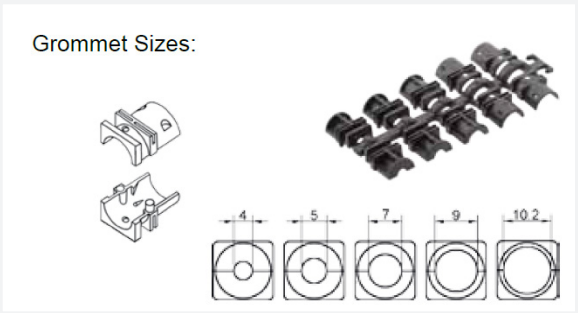

Size	A	B	C	D	E	F	G
9	15.0	31.0	15.0	24.0	51.0	18.0	26.5
15	15.3	39.2	15.0	24.0	59.0	18.0	26.5
25	16.0	54.0	23.0	34.5	73.0	24.5	37.0
37	16.0	70.5	23.0	34.5	89.5	24.5	37.0

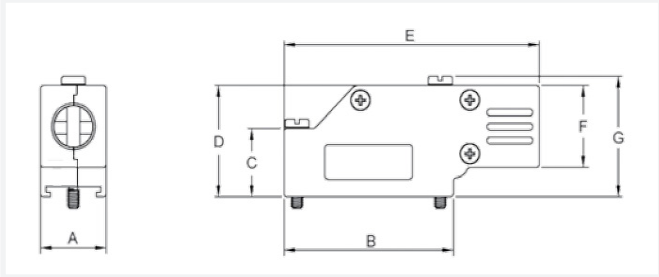

ORDERING INFORMATION

Description	Size	Part Numbers
DSUB METAL HOOD 09	9-way	8655GMES3C11KLF
DSUB METAL HOOD 15	15-way	8655GMAS3C11KLF
DSUB METAL HOOD 25	25-way	8655GMBS3C11KLF
DSUB METAL HOOD 37	37-way	8655GMCS3C11KLF

Disclaimer
Please note that the above information is subject to change without notice.

16• TWO SIDE EXIT FULL METAL HOOD

TECHNICAL INFORMATION

- Material: Zinc, Nickel Plated
- Operating Temperature Range: –40°C to +120°C
- Cable Entry: Side + Side Entry
- Thumbscrews: UNC 4–40 (Standard)
  M2.5 or M3 on request
- Cable O.D: Up to 11.5mm

FEATURES

- Available in size 9
- Excellent EMI Shielding
- Re–openable

ACCESSORIES

Universal Rubber Grommet

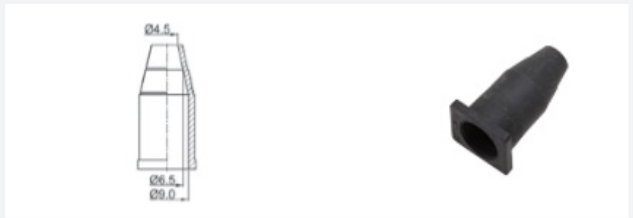

Size	Dim A	Dim B	Dim C
9–way	15	32.2	45
15–way	15	40.8	45
25–way	15	54.0	45

Metalized Plastic Grommet Kit

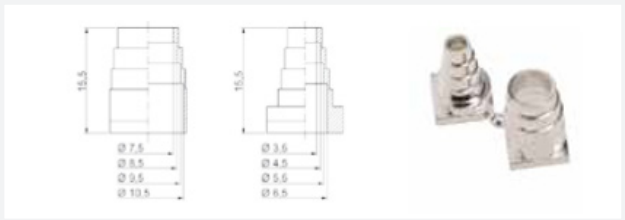

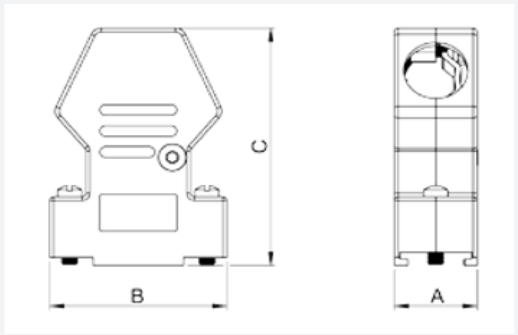

ORDERING INFORMATION

Description	Size	Part Numbers
DSUB METAL HOOD 09	9–way	8655HMED1A10KLF
DSUB METAL HOOD 15	15–way	8655HMAD1A10KLF
DSUB METAL HOOD 25	25–way	8655HMBD1A10KLF

Disclaimer
Please note that the above information is subject to change without notice.

17• METAL HOOD WITH CIRCULAR CLAMP AND STRAIGHT EXIT

TECHNICAL INFORMATION

- Material: Steel
- Plating: Yellow chromate cadmium
- Corrosion Resistance
- 50 hours exposure to salt spray

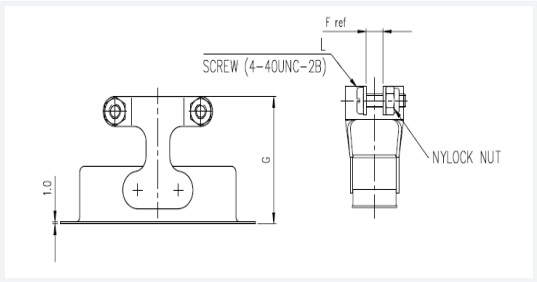

Shell Size	Part Numbers	A ± 0.38	B ± 0.38	C ± 0.13	D ref	E ± 0.38	F ref	G ± 0.76	H ± 0.38	L ± 0.80
E	863010A	30.68	12.70	25.00	10.31	16.79	3.18	26.19	8.74	9.53
A	863011A	38.89	12.70	33.30	10.31	25.00	3.18	26.19	8.74	9.53
B	863012A	52.78	12.70	47.04	15.06	38.48	4.75	27.08	8.74	9.53
C	863013A	69.04	12.70	63.50	18.25	55.14	6.35	27.08	8.74	12.70
D	863014A	66.68	15.47	61.12	20.62	53.16	7.93	27.08	11.13	15.88

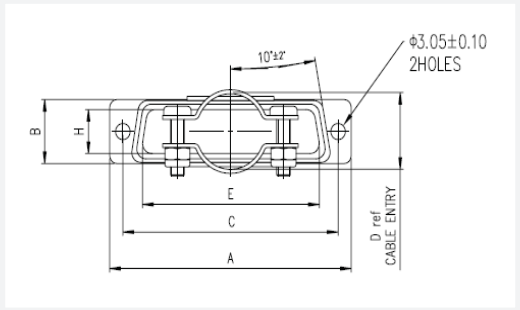

Disclaimer
Please note that the above information is subject to change without notice.

METALIZED HOODS

18• STRAIGHT EXIT METALIZED HOOD WITH SHORT SCREWS

TECHNICAL INFORMATION

- Material: UL recognised Plastic Material
- Plating: Nickel over Copper
- Operating Temperature: -40°C to +120°C
- Cable Entry: Top
- Thumbscrews: UNC 4-40 (Short)
- Cable O.D: 9-way Up to 7.0mm
  15-way Up to 10.0mm
  25-way Up to 11.0mm
  37-way Up to 13.8mm
  50-way Up to 14.0mm

FEATURES

- Available in sizes 9-15-25-37-50
- Re-openable
- Short Jackscrews

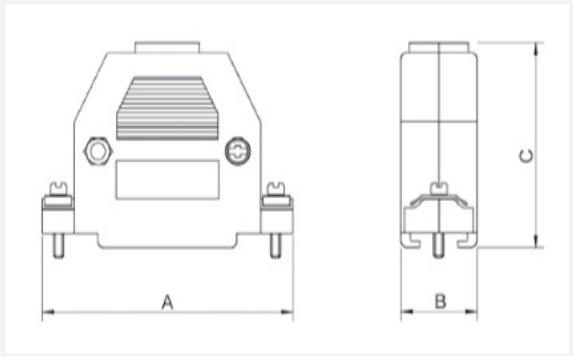

Size	Dim A	Dim B	Dim C
9-way	31.0	16.0	40.4
15-way	39.7	17.5	36.7
25-way	54.6	16.8	44.5
37-way	69.0	23.9	53.0
50-way	69.5	19.8	44.7

ORDERING INFORMATION

Description	Size	Part Numbers
METALIZED HOOD 09	9-way	8655BZET1B10KLF
METALIZED HOOD 15	15-way	8655BZAT1B10KLF
METALIZED HOOD 25	25-way	8655BZBT1B10KLF
METALIZED HOOD 37	37-way	8655BZCT1B10KLF
METALIZED HOOD 50	50-way	8655BZDT1B10KLF

Disclaimer
Please note that the above information is subject to change without notice.

19• STRAIGHT EXIT METALIZED HOOD WITH LONG JACK SCREWS

TECHNICAL INFORMATION

- Material: UL 94 V-0 Plastic Material
- Plating: Nickel over Copper
- Operating Temperature: -55°C to +110°C
- Cable Entry: Top
- Jack Screws: UNC 4-40 (Standard)
  M2.5 or M3 on request
- Cable O.D: Up to 11.7mm

FEATURES

- Available in sizes 9-15-25-37
- Strain relief inserts ensure a secure termination
- Re-openable

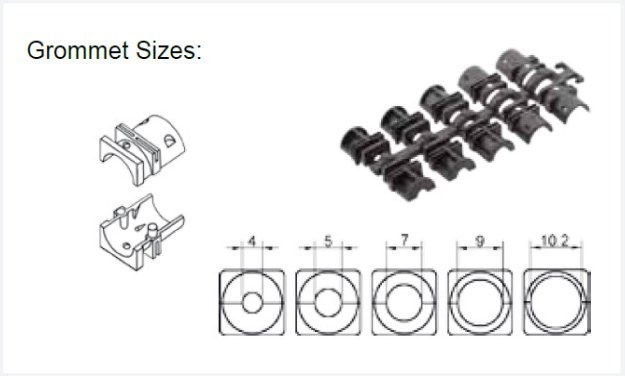

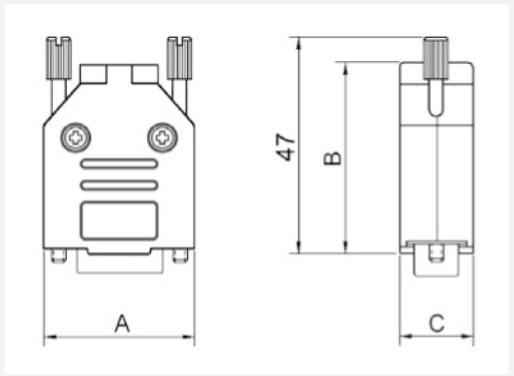

Size	Dim A	Dim B	Dim C
9-way	31.2	39.9	15.0
15-way	39.5	41.5	15.0
25-way	53.4	48.6	15.0
37-way	69.7	53.6	15.0

ORDERING INFORMATION

Description	Size	Part Numbers
METALIZED HOOD 09	9-way	8655AZET1A11KLF
METALIZED HOOD 15	15-way	8655AZAT1A11KLF
METALIZED HOOD 25	25-way	8655AZBT1A11KLF
METALIZED HOOD 37	37-way	8655AZCT1A11KLF

Disclaimer
Please note that the above information is subject to change without notice.

20• ANGLE EXIT METALIZED HOOD WITH LONG JACK SCREWS

TECHNICAL INFORMATION

- Material: UL 94 V–0 Plastic Material
- Plating: Nickel over Copper
- Operating Temperature: –55°C to +110°C
- Cable Entry: Side 45° entry
- Jack Screws: UNC 4–40 (Standard)
  M2.5 or M3 on request
- Cable O.D: Up to 11.7mm

FEATURES

- Available in sizes 9–15–25–37
- Strain relief inserts ensure a secure termination
- Re–openable

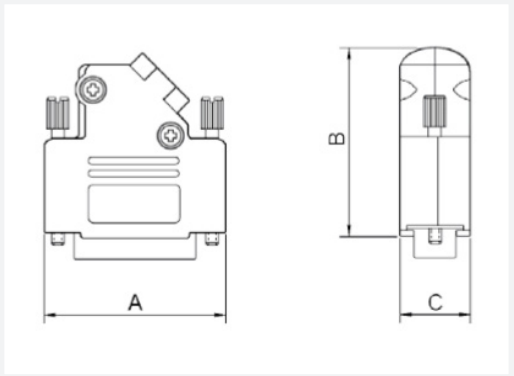

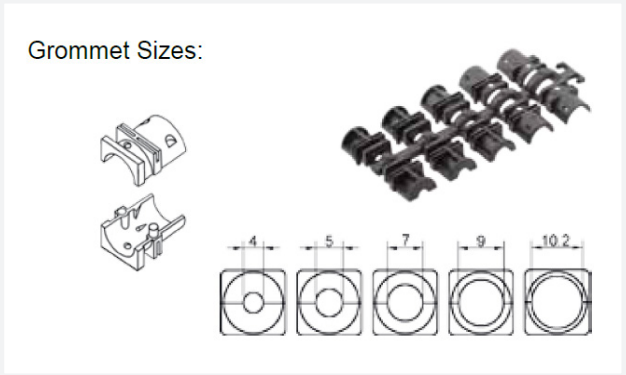

Size	Dim A	Dim B	Dim C
9–way	31.0	36.3	15.0
15–way	39.5	40.3	15.0
25–way	53.2	40.3	15.0
37–way	69.7	40.3	15.0

ORDERING INFORMATION

Description	Size	Part Numbers
METALIZED HOOD 09	9–way	8655AZES2A11KLF
METALIZED HOOD 15	15–way	8655AZAS2A11KLF
METALIZED HOOD 25	25–way	8655AZBS2A11KLF
METALIZED HOOD 37	37–way	8655AZCS2A11KLF

Disclaimer
Please note that the above information is subject to change without notice.

LOCKING DEVICES & OTHER ACCESSORIES

21• FEMALE SCREW LOCKS

Thread	L.Max	F	Material	Part Numbers
M3	8.30	6.90	Brass	863001TLF
M3	8.30	6.90	Steel	86552153TLF
M3	6.30	5.00	Brass	863001017TLF
M3	13.00	12.00	Brass	863001061TLF
UNC 4–40	8.30	6.90	Brass	863001060TLF

- Plating: Bright tin
- Corrosion Resistance: 24 hours exposure to salt spray

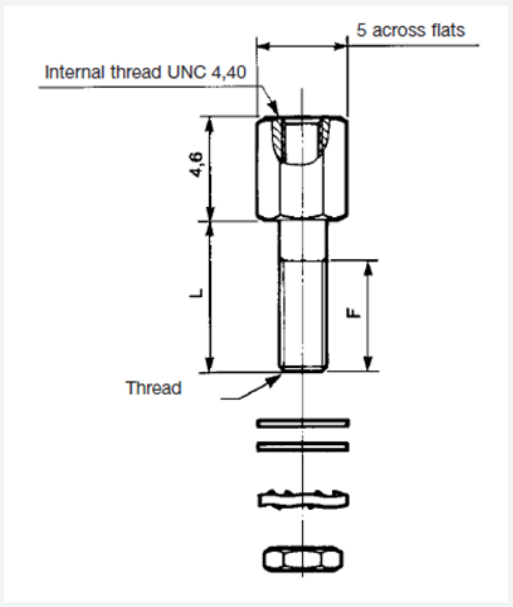

22• SPECIFIC FEMALE SCREW LOCKS FOR DELTA D SERIES

Thread	L.Max	F	Material	Part Numbers
M3	4.5	3.7	Steel	863001018TLF
UNC 4–40	4.5	3.7	Steel	863001019TLF

Material	Torque Max. (Nm)
Brass	0.5
Steel	0.7

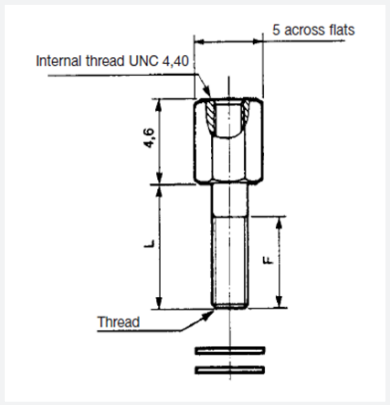

23• MALE SCREW LOCKS

Shell Size	Connector Type	Part Numbers		
		For use with connector without hood or with hood 2	For use with connector with hoods 18	For use with connector with hoods 6
E	Male	863005ATLF	863004ATLF	863009ATLF
	Female			
A	Male			
	Female			
B	Male			
	Female			
C	Male	863008ATLF		
	Female	863005ATLF		
D	Male	863015ATLF	863002ATLF	863025ATLF
	Female	863003ATLF		

Disclaimer
Please note that the above information is subject to change without notice.

TECHNICAL INFORMATION

- Material: Steel
- Plating: Bright tin
- Corrosion Resistance: 50 hours exposure to salt spray
- To obtain military plating (yellow chromate cadmium) exclude «TLF» in the part number (ex: 863005A)
- Thread: UNC 4–40

24• LEVER LOCKS

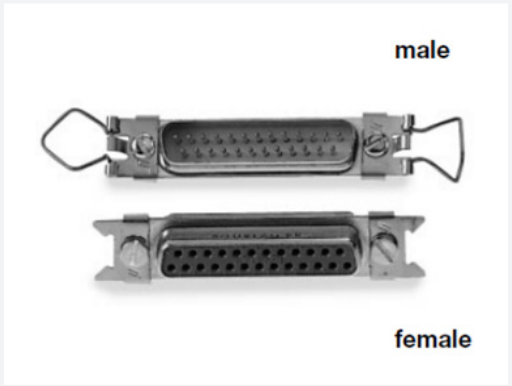

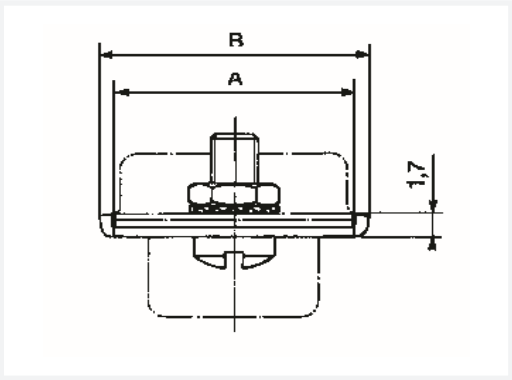

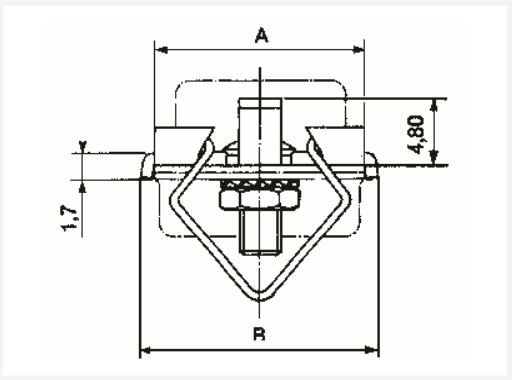

- Material: Steel
- Plating: Passivated

Shell Size	Material	Plating	A	B	M3 Thread		UNC 4–40 Thread	
					Female	Male	Female	Male
E, A, B, C	Steel	Passivated	12.50	14.30	86303425LF	86552096LF	86303425060LF	86552098LF

Disclaimer
Please note that the above information is subject to change without notice.

D–Subminiature (D–Sub) Accesasories

25• METAL DUST CAPS

Shell size	Connector Type Compatibility	Part Numbers	Diameter
E	Male	86553148TLF	30
	Female	86553113TLF	30
		86553138TLF*	30
A	Male	86553149TLF	25
	Female	86553114TLF	25
		86553139TLF*	25
B	Male	86553150TLF	20
	Female	86553115TLF	20
		86553140TLF*	20
C	Male	86553151TLF	15
	Female	86553116TLF	15
		86553141TLF*	15
D	Male	86553152TLF	10
	Female	86553117TLF	10
		86553142TLF*	10

* Sealed caps IP 65

- Material: Steel
- Plating: Bright tin

26• PLASTIC DUST CAPS

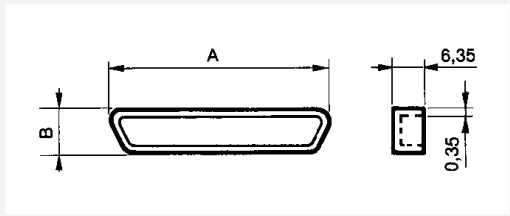

Shell size	For Male Connector	A	B	For Female Connector	A	B
E	70518BLF	19.17	10.30	70523BLF	17.77	9.0
A	70519BLF	27.50	10.30	70524BLF	26.10	9.0
B	70520BLF	41.67	10.70	70525BLF	39.82	9.0
C	70521BLF	58.13	10.70	70526BLF	56.28	9.0
D	70522BLF	55.49	13.40	70527BLF	53.89	11.85

- Material: Thermoplastic
- Color: Black
- For Red colour, to change the “B” to “C” in P/N logic, Eg: 70518CLF

27• ATTACHING CORD FOR METAL CAPS

86553156LF (Length = 100 mm) Packaging: Individual

EXPLORE THE PRODUCT DETAILS ONLINE
Scan Now ▶

ACPADSUBACC0926EA4

Disclaimer
Please note that the above information is subject to change without notice.