BergStik® Pin Headers Straight Unshrouded

2.54MM PITCH

VERSATILE PIN HEADERS WITH BREAKAWAY DESIGN

BergStik® Amphenol's FCI Basics 2.54mm unshrouded pin headers are offered in Surface-mount (SMT), Through-hole (THT), Press-fit (PF), and Pin-in-Paste (PIP) versions. Available in single and double rows from 2 to 72 positions.

These "breakaway pin headers" can be cut or broken into specific lengths to suit the application profile with a maximum current rating of 3A per contact. The drawn-wire pins offer an economical solution for various applications with durability of up to 100 mating cycles.

- Same PCB layout for Through-Hole and PF versions
- Multiple termination options: SMT, THT, PF, PIP
- Fully compatible with Dubox® receptacles

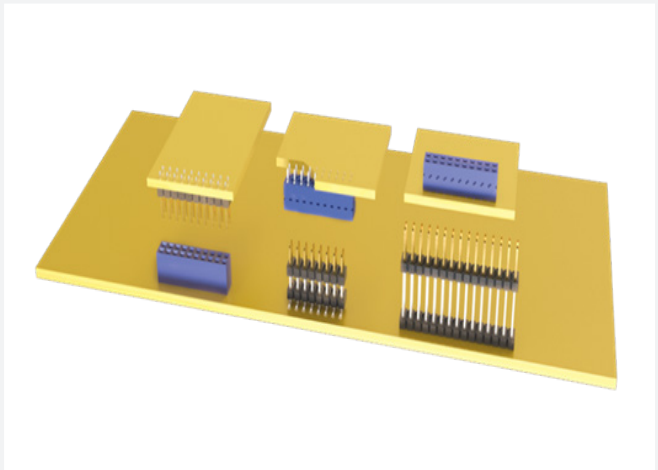

TARGET MARKETS

FEATURES	BENEFITS
High-temperature thermoplastic material	Re-flow compatible
Customizable height	Cater to a wide range of applications
Blank 0.64mm square contacts present 4 surfaces of equal quality	Suitable for mezzanine application and gives more flexibility in meeting different stack height requirements
Standoff design	Can be used for wire wrapping
Duplex plating	Allows cleaning to remove soldering contamination
Tin-lead plating in press-fit area	Cost efficient
Press-fit designed to fit 1.02mm diameter hole, solder-to-board products	Easy pin insertion onto PCB High retention force onto PCB
Meets DIN 41651 specification, HE 13, and BT D2632	Same layout on THT and press-fit Qualified product

TECHNICAL INFORMATION

MATERIAL

- Housing: High-temperature thermoplastic
- Flammability Rating: UL94V-0
- Pin: Phosphor Bronze
- Plating: Gold / GXT® or Tin over 1.27µm (50µin) Nickel

MECHANICAL PERFORMANCE

- Pin Retention Force to Housing: 9N min.

ELECTRICAL PERFORMANCE

- Current Rating:
  - 3A continuous
  - 2A DC max. per contact for fully energized connector
- Insulation Resistance: 5000MΩ min.
- Dielectric Withstanding Voltage: 1500Vrms min.

ENVIRONMENTAL

- Operating Temperature Range: -65°C to +125°C

SPECIFICATIONS

- Product Specification: BUS-12-050 / BUS-12-144 (duplex plated) / BUS-12-117 (press-fit)

APPROVALS & CERTIFICATION

- UL Approval: E66906

PACKAGING

- Poly bags
- Endless reels
- Optional: Tubes or Tape and Reel with pick-up cap (if available)

TOOLING INFORMATION

- Insertion tool: 30AWG to 20AWG

TARGET MARKETS/APPLICATIONS

Personal Care Devices (Air Dryer)
Home Care Devices (Cleaning Robot)
Home Automation (Alarm System)

Server
Storage

Robotics
Programmable Logic Controller (PLC)
Power Tool

PART NUMBERS

Description	Part Numbers
Unshrouded Header, Straight, Single Row, TMT	77311
Unshrouded Header, Straight, Single Row, SMT	95293
Unshrouded Header, Straight, Single Row, Press-Fit	93689
Unshrouded Header, Straight, Double Row, TMT	77313
Unshrouded Header, Straight, Double Row, SMT	95278
Unshrouded Header, Straight, Double Row, Press-Fit	93690

Find part number details using the search box on www.amphenol-cs.com

Disclaimer
Please note that the above information is subject to change without notice.

PART NUMBER SELECTOR – STRAIGHT UNSHROUDED HEADERS

Find part number details using the search box on www.amphenol-cs.com

77311 — **Y** **XX** — **XX** **LF**

- 77311: BASE PART NUMBER
- Y: Plating Option
- XX: Pin Style
- XX: Total number of positions
- LF: Lead-free compatibility

Plating Option	
1	0.76µm GXT® on contact area
4	2µm tin on contact area
8	0.38µm GXT® on contact area
Other plating options available upon request	

Pin Style	
01	Mating side = 5.84mm Solder side = 2.41mm
02	Mating side = 5.84mm Solder side = 3.42mm
18	Mating side = 5.84mm Solder side = 3.05mm
Other pin styles available upon request	

BASICSBRGSTKHDRSUH0826EA4

Disclaimer
Please note that the above information is subject to change without notice.

BergStik® Pin Headers Stacking Unshrouded

2.54MM PITCH

CUSTOMIZABLE STACKING HEADERS WITH BREAKAWAY DESIGN

BergStik® Amphenol's FCI Basics 2.54mm Stacking Unshrouded Pin Headers are offered in Surface-mount (SMT), Through-hole (THT), Press-fit (PF) and Pin-in-Paste (PIP) versions. Available in single and double rows from 2 to 72 positions.

These "breakaway pin headers" can be cut or broken into specific lengths to suit the application profile with a maximum current rating of 3A per contact.

The drawn-wire pins offer an economical solution for various applications with durability up to 100 mating cycles.

- Duplex, triplex or full plating
- Height up to 55.00mm (duplex plating) and 65.00mm (triplex)
- Multiple termination options: SMT, THT, PF, PIP
- Fully compatible with Dubox® receptacles

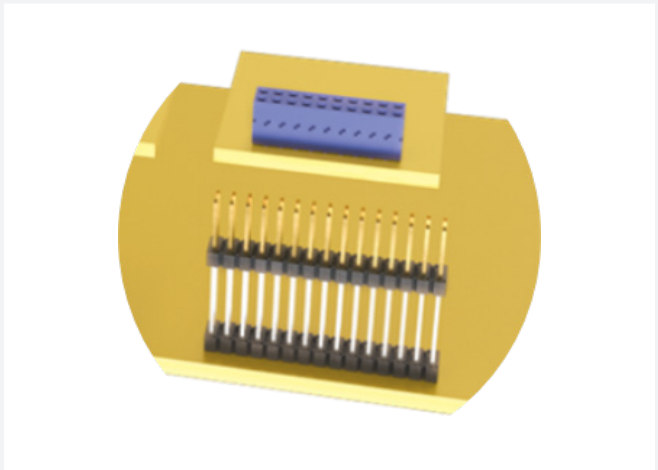

TARGET MARKETS

FEATURES	BENEFITS
High-temperature thermoplastic material	Re-flow compatible
Customizable height	Cater to a wide range of applications
Allow dual entry, mating from top or bottom	Suitable for mezzanine application and gives more flexibility in meeting different stack height requirements
Blank 0.64mm square contacts present four surfaces of equal quality	Can be used for wire wrapping
Standoff design	Allows cleaning to remove soldering contamination
Duplex plating	Cost efficient
Tin-lead plating in press-fit area	Easy pin insertion onto PCB
Press-fit designed to fit 1.02mm diameter hole, solder-to-board products	High retention force onto PCB
Meets DIN 41651 specification, HE 13, and BT D2632	Same layout on THT and Press-fit Qualified product

TECHNICAL INFORMATION

MATERIAL

- Housing: High-temperature thermoplastic
- Flammability Rating: UL94V-0
- Pin: Phosphor Bronze
- Plating: Gold / GXT® or Tin over 1.27µm (50µin) Nickel

MECHANICAL PERFORMANCE

- Pin Retention Force to Housing: 9N min.

ELECTRICAL PERFORMANCE

- Current Rating:
  - 3A continuous 2ADC max. per contact for fully energized connector
- Insulation Resistance: 5000MΩ min.
- Dielectric Withstanding Voltage: 1500Vrms min.

ENVIRONMENTAL

- Operating Temperature Range: -65°C to +125°C

SPECIFICATIONS

- Product Specification: BUS-12-050 / BUS-12-144 (duplex plated) / BUS-12-117 (press-fit)

APPROVALS & CERTIFICATION

- UL Approval: E66906

PACKAGING

- Poly bags
- Optional: Tubes or Tape and Reel with pick-up cap (if available)

TARGET MARKETS/APPLICATIONS

Personal Care Devices (Air Dryer)
Home Care Devices (Cleaning Robot)
Home Automation (Alarm System)

Server
Storage

Robotics
Programmable Logic Controller (PLC)
Power Tool

PART NUMBERS

Description	Part Numbers
Unshrouded Stacking Header, Vertical, Single Row, TMT	54121
Unshrouded Stacking Header, Vertical, Single Row, Press-Fit	10124323
Unshrouded Stacking Header, Vertical, Double Row, TMT	54122
Unshrouded Stacking Header, Vertical, Double Row, SMT	54242
Unshrouded Stacking Header, Vertical, Double Row, Press-Fit	10112620

Find part number details using the search box on www.amphenol-cs.com

Disclaimer
Please note that the above information is subject to change without notice.

PART NUMBER SELECTOR – STACKING UNSHROUDED HEADERS

Find part number details using the search box on www.amphenol-cs.com

54121 — Y XX XX XXXX LF

- 54121: BASE PART NUMBER
- Y: Plating Option
- XX: Pin Style (OAL) — See selection guide below. Available upon request
- XX: Total number of positions
- XXXX: Stack height (in mm) Example for stack height: 1270 = 12.70mm
- LF: Lead-free compatibility

Plating Option	
1	0.76µm GXT® on contact area
4	2µm Tin on contact area
8	0.38µm GXT® on contact area
Other plating options available upon request	

PART OVERVIEW

- **Mating Length**: The length of the connector part that inserts into the receptacle, ensuring a secure electrical connection
- **Solder Tail**: The part of the connector used for soldering onto the printed circuit board, ensuring a secure attachment
- **OAL (Overall Length)**: The total length of the connector, including the mating length and solder tail, determining the overall size of the connector
- **Stack Height**: The total stack height of the connectors when assembled, influencing the overall arrangement of electronic components (between housing)

54112, 54122 – Stacking Headers – Double Row – Through Hole

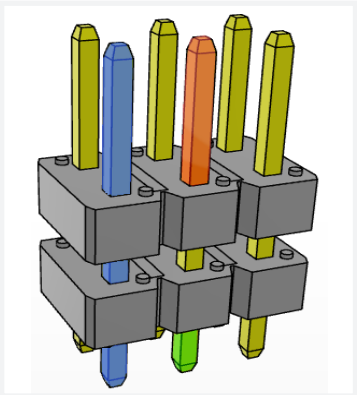

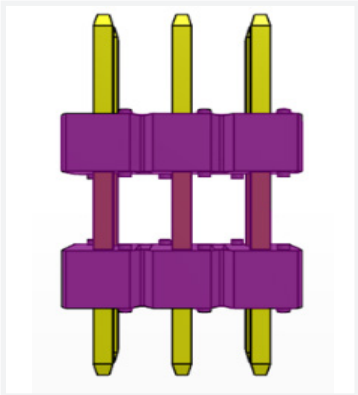

Disclaimer
Please note that the above information is subject to change without notice.

STANDARD CONFIGURATION A

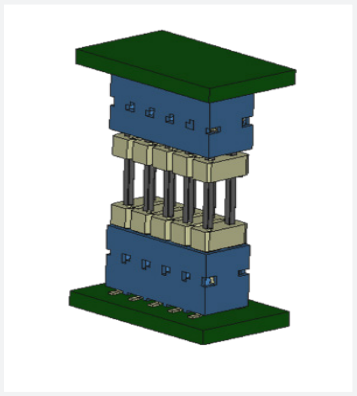

Optimal OAL Formula*: Your Board-to-Board Distance – 3.40mm

STANDARD CONFIGURATION B

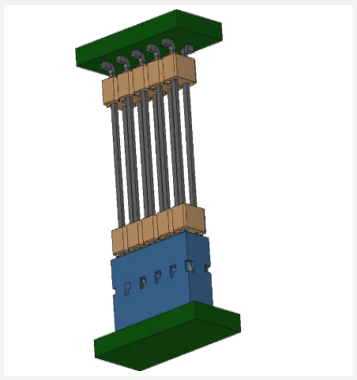

Optimal OAL Formula*: Your Board-to-Board distance – 1.70mm

STANDARD CONFIGURATION C

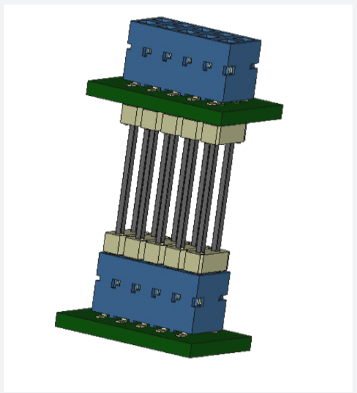

Optimal OAL Formula*: Your Board-to-Board Distance
+ your PCB thickness
+ 5.50mm

STANDARD CONFIGURATION D

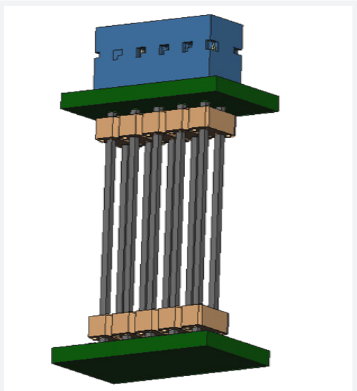

Optimal OAL Formula*: Your Board-to-Board Distance
+ your PCB thickness
+ 7.20mm

BASICSBRGSTKSTCKUH0826EA4

This calculation formula is applicable only with low-profile DUBOX receptacles (7.00mm high)

Disclaimer
Please note that the above information is subject to change without notice.

BergStik® Pin Headers Right-Angle Unshrouded

2.54MM PITCH

VERSATILE HEADERS WITH BREAKAWAY DESIGN

BergStik® Amphenol's FCI Basics 2.54mm unshrouded pin headers are offered in Surface-mount (SMT), Through-hole (THT), and Pin-in-Paste (PIP) versions. Available in single and double rows from 2 to 72 positions.

These "breakaway pin headers" can be cut or broken into specific lengths to suit the application profile with a maximum current rating of 3A per contact. The drawn-wire pins offer an economical solution for various applications with durability of up to 100 mating cycles.

- Same PCB layout for Through-Hole and PF versions
- Multiple termination options: SMT, THT, PIP
- Fully compatible with Dubox® PCB receptacles

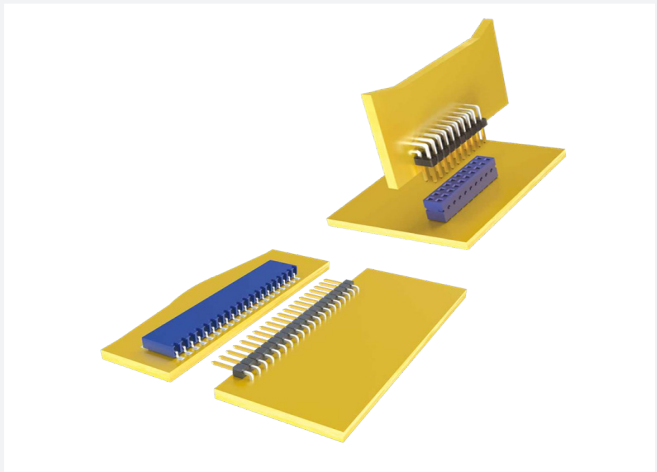

TARGET MARKETS

FEATURES	BENEFITS
High-temperature thermoplastic material	Re-flow compatible
Customizable height	Cater to a wide range of applications
Blank 0.64mm square contacts present four surfaces of equal quality	Suitable for mezzanine application and gives more flexibility in meeting different stack height requirements
Standoff design	Can be used for wire wrapping
Duplex plating	Allows cleaning to remove soldering contamination
Tin-lead plating in press-fit area	Cost efficient
Press-fit designed to fit 1.02mm diameter hole, solder-to-board products	Easy pin insertion onto PCB High retention force onto PCB
Meets DIN 41651 specification, HE 13, and BT D2632	Same layout on THT and Press-fit Qualified product

TECHNICAL INFORMATION

MATERIAL

- Housing: High-temperature thermoplastic
- Flammability Rating: UL94V-0
- Pin: Phosphor Bronze
- Plating: Gold / GXT® or Tin over 1.27µm (50µin) Nickel

MECHANICAL PERFORMANCE

- Pin Retention Force to Housing: 9N min.

ELECTRICAL PERFORMANCE

- Current Rating: 3A continuous 2A DC max. per contact for fully energized connector
- Insulation Resistance: 5000MΩ min.
- Dielectric Withstanding Voltage: 1500Vrms min.

ENVIRONMENTAL

- Operating Temperature Range: -65°C to +125°C

SPECIFICATIONS

- Product Specification: BUS-12-050 / BUS-12-144 (duplex plated) / BUS-12-117 (press-fit)

APPROVALS & CERTIFICATION

- UL Approval: LR46923

PACKAGING

- Poly bags
- Optional: Tubes or Tape and Reel with pick-up cap

TOOLING INFORMATION

- Insertion tool: 30AWG to 20AWG

TARGET MARKETS/APPLICATIONS

Personal Care Devices (Air Dryer)
Home Care Devices (Cleaning Robot)
Home Automation (Alarm System)

Server
Storage

Robotics
Programmable Logic Controller (PLC)
Power Tool

PART NUMBERS

Description	Part Numbers
Unshrouded Header, Horizontal, Single Row, TMT/PIP	77315
Unshrouded Header, Horizontal, Single Row, SMT	10119333
Unshrouded Header, Horizontal, Double Row, TMT/PIP	77317
Unshrouded Header, Horizontal, Double Row, SMT	10118084

Find part number details using the search box on www.amphenol-cs.com

PART NUMBER SELECTOR – RIGHT-ANGLE UNSHROUDED HEADERS

Find part number details using the search box on www.amphenol-cs.com

77315 — Y XX — XX LF

- 77315: BASE PART NUMBER
- Y: Plating Option
- XX: Pin Style
- XX: Total number of positions
- LF: Lead-free compatibility

Plating Option	
1	0.76µm GXT® on contact area
4	2µm tin on contact area
8	0.38µm GXT® on contact area
Other plating options available upon request	

Pin Style	
01	Mating side = 5.72mm Solder side = 2.57mm
18	Mating side = 5.84mm Solder side = 3.05mm
Other pin styles available upon request	

BASICSBRGSTKRAUH0826EA4

Disclaimer
Please note that the above information is subject to change without notice.

BergStik® SHUNTS Board/Wire-to-Board Connectors

RELIABLE DESIGN, ENHANCED RETENTION

Amphenol's BergStik® SHUNTS has a comprehensive and extensive solution designed with solder tails that self-center on circuit pads to assure coplanarity. A locating feature helps to maintain alignment for soldering and facilitates robot placement.

- Dual beam contact design to ensure high reliable electrical performances
- Contact pre-stressed that requires low insertion force required
- 4 wall contact design for signal protection

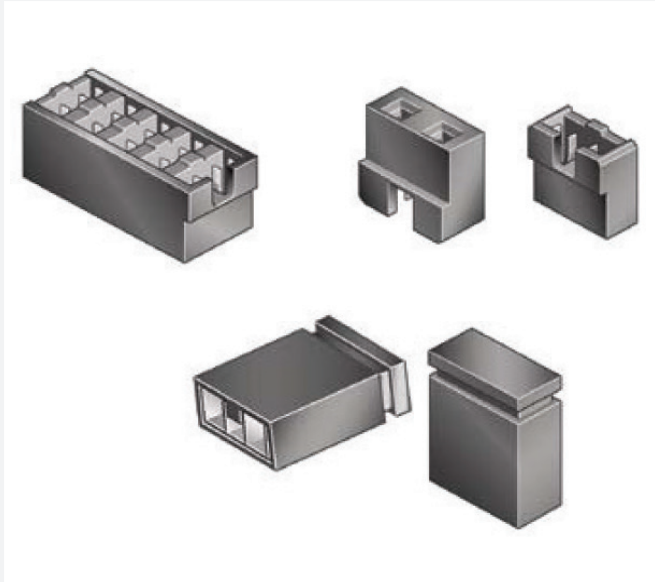

TARGET MARKETS

FEATURES	BENEFITS
Dual beam contact design	Highly reliable electrical performances
Pre-stressed contact	Low insertion force
Mates with very short pins (5mm) and are stackable end-to-end and side-by-side	Suitable for mezzanine applications and meets different application requirements
Floating solder tails with self-centering on the circuit pads	Assures coplanarity
4 wall contact design	Improved signal protection
Duplex plating	Cost efficient
Locating feature available	Maintains the alignment for soldering and facilitates robotic placement
High-temperature thermoplastic material	Compatible with Infrared and Vapor phase reflow
Compliant to DIN41651 specifications, HE13 and BT D2632	Qualifies industry specific standards

TECHNICAL INFORMATION

MATERIAL

- Housing: High-temperature, black thermoplastic
- Flammability Rating: UL94V-0
- Pin: Phosphor Bronze
- Plating: Gold or Tin over 1.27µm (50µin) Nickel

MECHANICAL PERFORMANCE

- Mating cycles (durability): 50-Gold, 25-Tin
- Insertion force:
  - 450gf max. per gold contact
  - 500gf max. per tin-lead contact
- Withdrawal force:
  - 30gf min. per gold contact
  - 30gf min. per tin-lead contact
- Insertion depth:
- 4.85 mm (.191in.) min. [provides 3.81 mm (.015in.) wipe] - Low profile

ELECTRICAL PERFORMANCE

- Current Rating: 2.5A max. per contact
- Insulation Resistance: 50,000MΩ min.
- Contact Resistance: 15mΩ max. initial, 20mΩ max. after environmental tests
- Dielectric Withstanding Voltage: 800V

SPECIFICATIONS

- File No. E66906
- File No. LR46923
- Product Drawing: By 5-digit base part number
- Product Specification:
  - BUS-12-071-gold
  - BUS-12-070-tin

ENVIRONMENTAL

- Operating Temperature Range: -65°C to +125°C

APPROVALS & CERTIFICATION

- This product is RoHS compatible according to the European Union Directive 2002/95/IEC

PACKAGING

- Plastic bags

TARGET MARKETS/APPLICATIONS

Personal Care Devices (Air Dryer)
Home Care Devices (Cleaning Robot)
Home Automation (Alarm System)

Sever
Storage

Robotics
Programmable Logic Controller (PLC)
Power Tool

TYPICAL APPLICATIONS

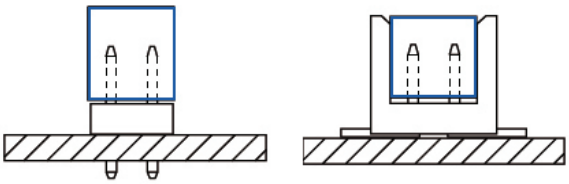

PART NUMBERS

Description	Part Series
Shunt Low Profile, Single Row	68786
Shunt Low Profile, Double Row, Multi-position	69145
Shunt Standard, Single Row	63429

Find part number details using the search box on www.amphenol-cs.com

Disclaimer
Please note that the above information is subject to change without notice.

BergStik® SHUNTS Board/Wire-to-Board Connectors

PART NUMBER SELECTOR SHUNTS

CORE RANGE

Find part number details using the search box on www.amphenol-cs.com

68786 — 202LF

LOW PROFILE

Find part number details using the search box on www.amphenol-cs.com

68786 — X 02 — LF

BASE PART NUMBER

Lead-free compatibility

Plating Option	
2	0.76µm GXT® on contact area
3	2µm Tin on contact area
Other plating options available upon request	

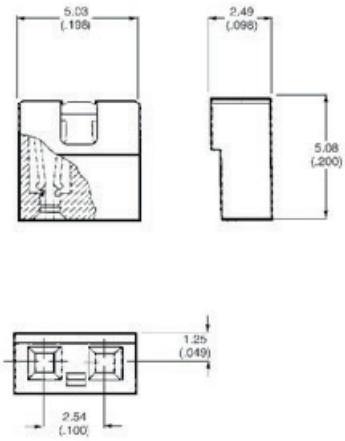

MULTI-POSITION

Find part number details using the search box on www.amphenol-cs.com

69145 — X XX — LF

BASE PART NUMBER

Lead-free compatibility

Number of positions
(04 to 20 positions)

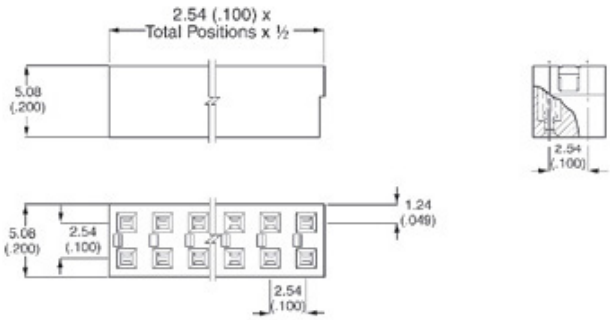

STANDARD

Find part number details using the search box on www.amphenol-cs.com

63429 — X 02 — LF

BASE PART NUMBER

Lead-free compatibility

Plating Option	
2	0.76µm GXT® on contact area
3	2µm Tin on contact area
Other plating options available upon request	

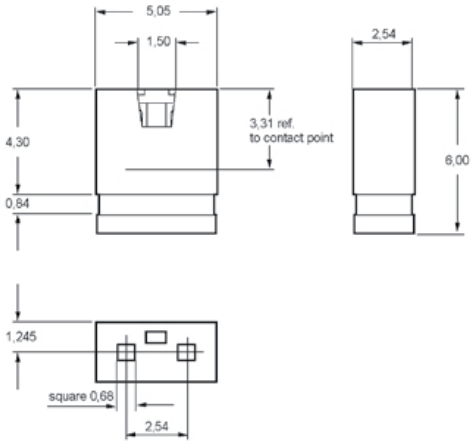

BASICSBRGSTKSHUNTS0826EA4

WHERE INNOVATION CONNECTS
Scan to learn more ▶

Disclaimer
Please note that the above information is subject to change without notice.