CODINGS

CODING - A

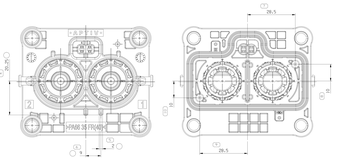

CODING - B

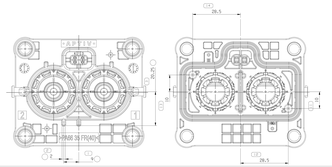

CODING - C

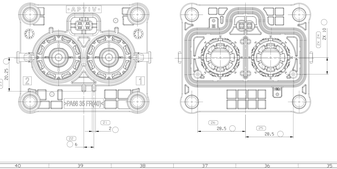

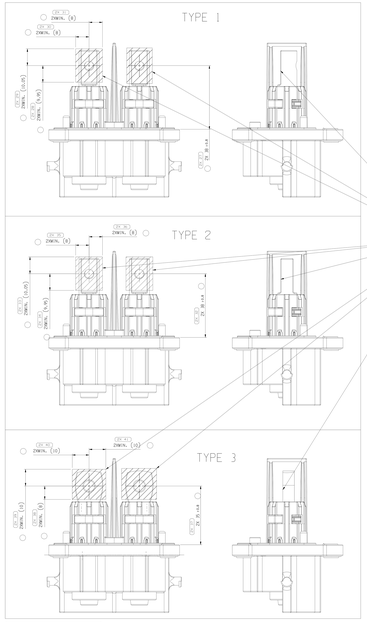

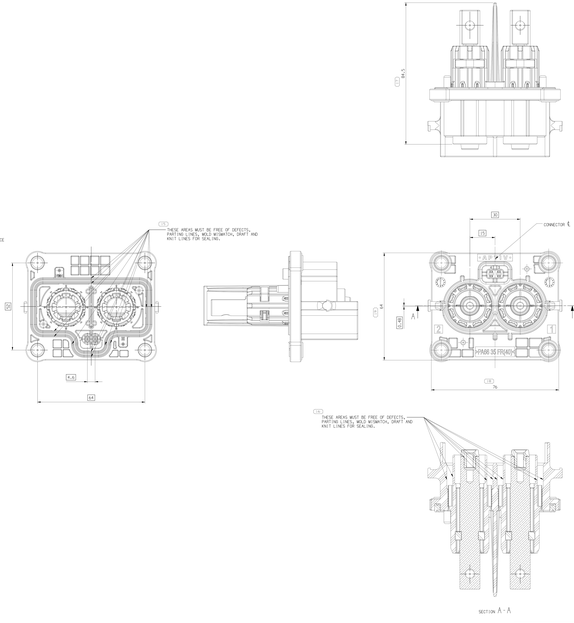
THESE AREAS MUST BE FREE OF DEFECTS, PARTING LINES, MOLD MISMATCH, DRAFT AND KNIT LINES FOR SEALING.
CONNECTOR ℄
WIRE WIPE TERMINAL-WAY OF DISPLACEMENT
THESE AREAS MUST BE FREE OF DEFECTS, PARTING LINES, MOLD MISMATCH, DRAFT AND KNIT LINES FOR SEALING.
SECTION A-A
HP6A6 36 FR/40X
A1
A
4.5
54
50
10.5
76
16.5
18.5
2.5
2.5
2